Interior Lights
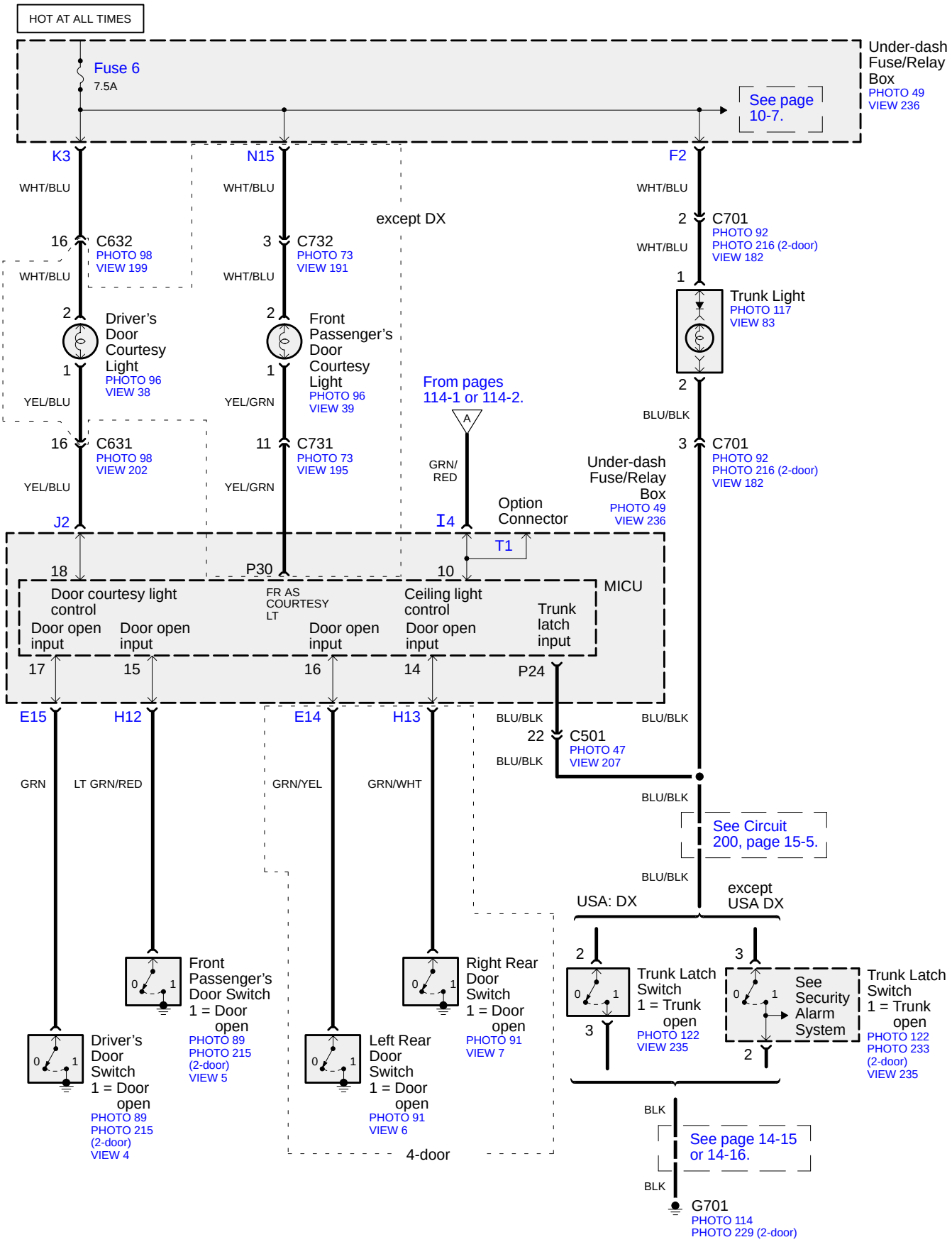
– Door Courtesy Lights and Trunk Light